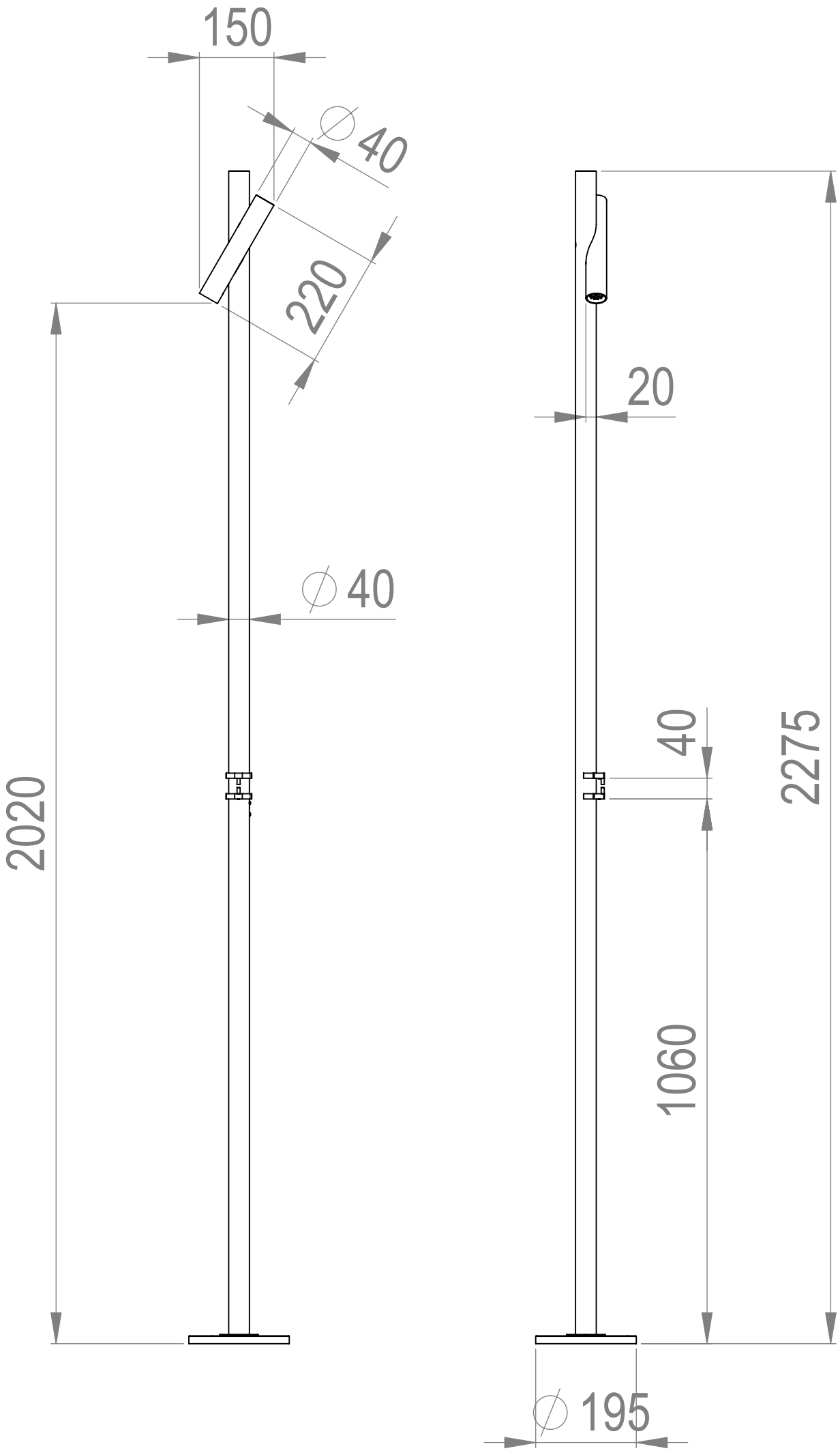
150
∅40
220
∅40
2020
20
40
2275
1060
∅195